MERCURY (225 (DFI))
Serial Nbr Range: 0T801000_Up (USA)

Oiling System

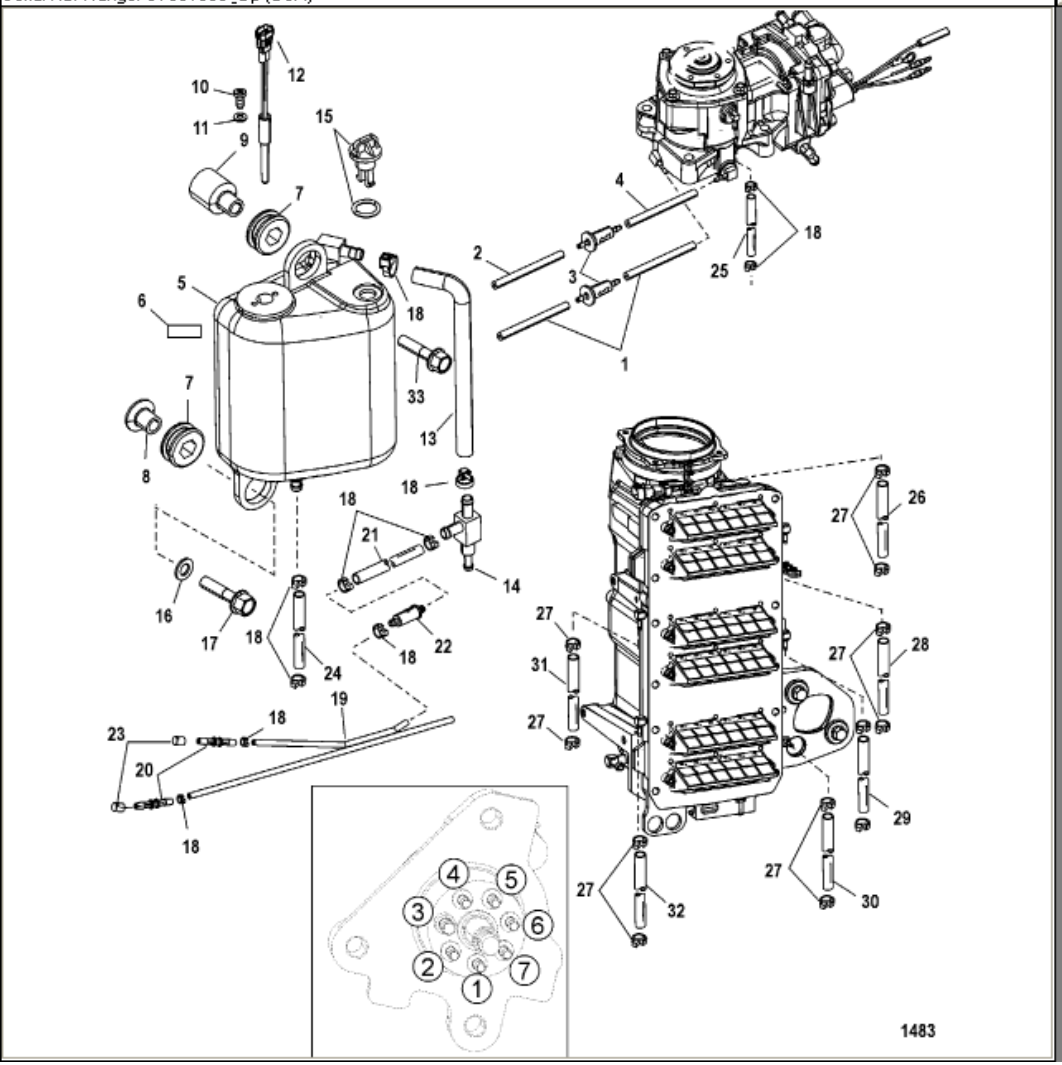

Parts List

Ref	Class	Part	Description	Qty	Comment	Footnote
1	32	856060 65	TUBING, (38.00 Inches Bulk) (Cut t	2		
2	32	856060 65	TUBING, (38.00 Inches Bulk) (Cut t	1		
3	35	18206001	FUEL FILTER	2	SN# 0T979999 & Below	
3	35	18206	FILTER	2	SN# 0T980000 & Up	
4	32	856060 65	TUBING, (38.00 Inches Bulk) (Cut t	1		
5	1200	884525T 1	OIL TANK	1		
6		NSS	NOT SOLD SEPARATE, Decal-F	1		
7	25	855362	GROMMET	3	SN# 0T979999 & Below	
7	25	855362001	GROMMET	3	SN# 0T980000 & Up	
8	23	855364	BUSHING	2		
9	23	883050	SPACER	1		
10	10	58376	SCREW, (.164-18 x .375)	1		
11	12	72761	WASHER	1		
12	87	856156A 4	SWITCH	1		
13	32	885553	HOSE	1		
14	22	42425 4	FITTING	1		
15	19	887609	PLUG	1		
16	12	40023 18	WASHER	3		
17	10	818934 35	SCREW, (M8 x 35)	2		
18	54	816311T	CABLE TIE, (8.00 Inches)	AR		
19	32	875289 1	HOSE, To Block	1		
20	22	858955	CONNECTOR	2		
21	32	875283	HOSE, (2.00 Inches)	1		
22	35	875284001	OIL FILTER, In Line	1		
23		NSS	NOT SOLD SEPARATE, Plug	2		
24	32	892830053	HOSE, (24.00 Inches Braided) (Cut	1		
25	32	855834 66	HOSE, (40.00 Inches Bulk) (Cut to :	1		
26	32	856060 65	TUBING, (38.00 Inches Bulk) (Cut t	1		
27		56762	CABLE TIE, (4.00 Inch)	AR		
28	32	856060 65	TUBING, (38.00 Inches Bulk) (Cut t	1		
29	32	856060 65	TUBING, (38.00 Inches Bulk) (Cut t	1		
30	32	856060 65	TUBING, (38.00 Inches Bulk) (Cut t	1		
31	32	856060 65	TUBING, (38.00 Inches Bulk) (Cut t	1		
32	32	856060 65	TUBING, (38.00 Inches Bulk) (Cut t	1		
33	10	818934 60	SCREW, (M8 x 60)	1		